FlowCon international

A Griswold Controls LLC./FlowCon International Company

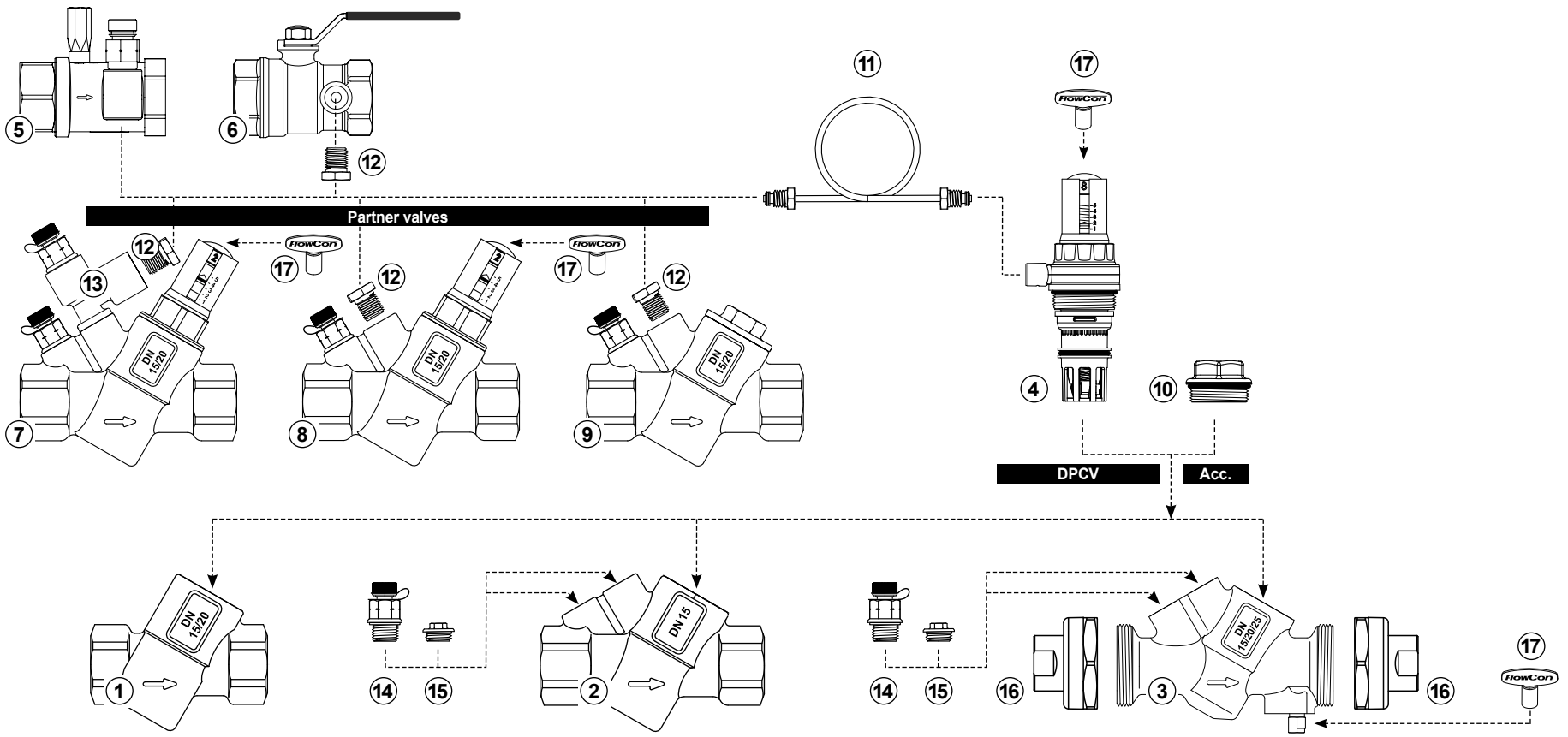

FlowCon EDP.1 DN15-25 (1/2”-1”) · Differential Pressure Control Valve

Valve housings		Insert		Partner Valves		Accessories	
① A15.I	Valve housing, DN15 (1/2”)	④ EDP.1	20 mm EDP insert	⑤ FQ.x	QuickDisc®	⑩ ACC0080	Flushing cap
① A20.I	Valve housing, DN20 (3/4”)			⑥ PBV.x	Partner Ball	⑪ ACC00110	Capillary tube
① A25.I	Valve housing, DN25 (1”)			⑦ S-JUST.x.x	S-JUST in AB housing with p/t	⑫ ACC00121	Union G 1/4” adaptor
② AB15.I	Valve housing, DN15 (1/2”)			⑧ AB.xx.B.I.xx.E	E-JUST in AB housing with p/t	⑬ ACC00103	T-piece
② AB20.I	Valve housing, DN20 (3/4”)			⑨ AB.xx.B.I.xx	Composite in AB housing with p/t	⑭ 2 x ACC00113	P/t plug with gasket
② AB25.I.K	Valve housing, DN25 (1”)			**Insulation Shells**		⑮ 2 x ACC1B03000	Plug with gasket
③ ABV.1	Valve housing, DN15/20/25 (1/2”, 3/4”, 1”)			IEDP	Insulation shell for ① ② (not shown)	⑯ 2 x 1C000xx	Union end connection
				IPartner	Insulation shell for ⑦ ⑧ ⑨ (not shown)	⑰ ACC0001	Adjustment key

FlowCon international

A Griswold Controls LLC./FlowCon International Company

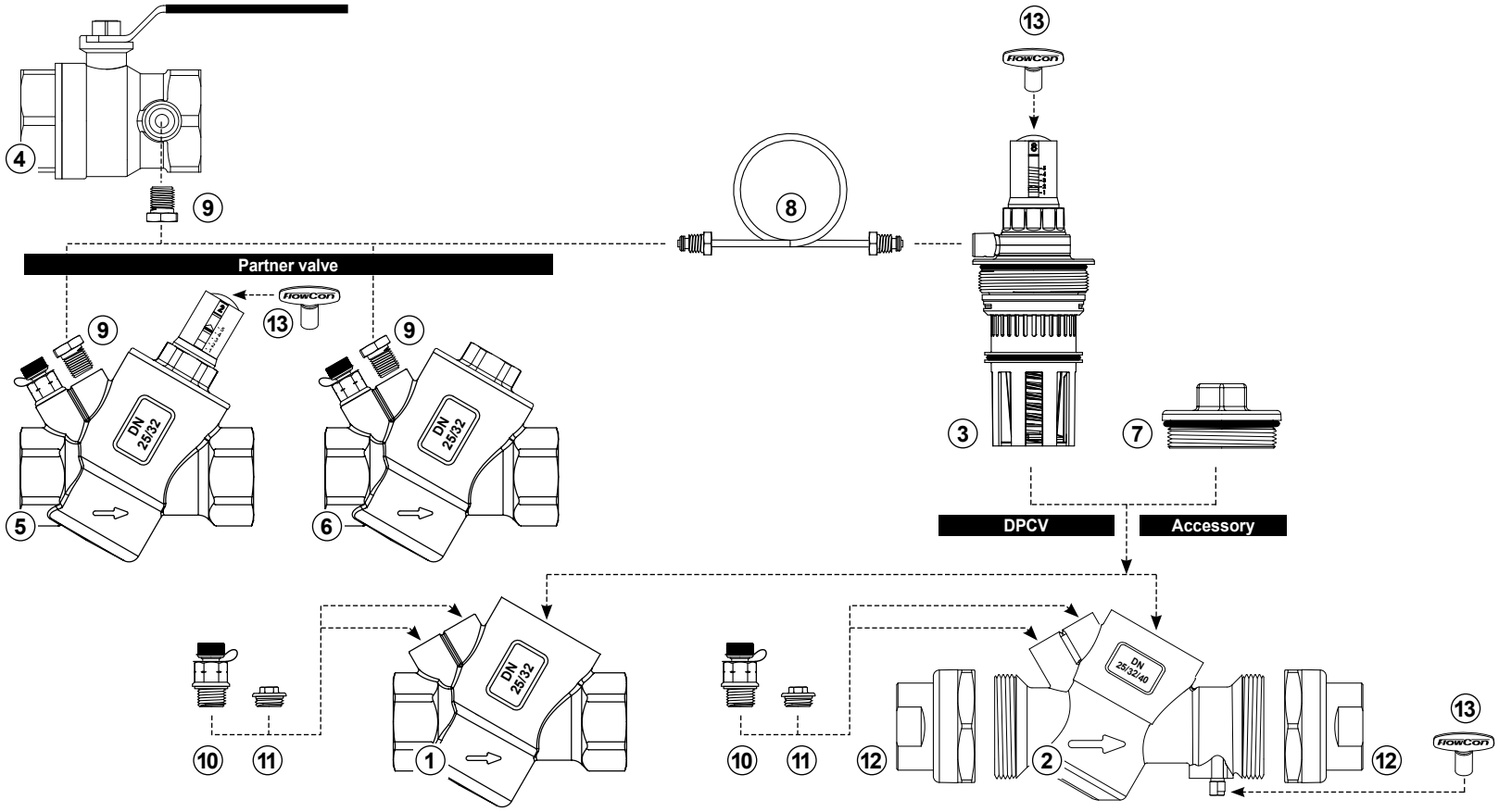

FlowCon EDP.2 DN25-40 (1”-1 1/2”) · Differential Pressure Control Valve

Valve housings		
(1)	AB25.I	Valve housing, DN25 (1”)
(1)	AB32.I	Valve housing, DN32 (1 1/4”)
(2)	ABV.2	Valve housing, DN25/32/40 (1”, 1 1/4”, 1 1/2”)

Insert		
(3)	EDP.2	40 mm EDP insert

Partner Valves		
(4)	PBV.x	Partner Ball
(5)	AB.xx.B.I.xx.E	E-JUST in AB housing with p/t
(6)	AB.xx.B.I.xx	Composite in AB housing with p/t

Accessories		
(7)	ACC0081	Flushing cap
(8)	ACC00110	Capillary tube
(9)	ACC00121	Union G 1/4” adaptor
(10)	2 x ACC00113	P/t plug with gasket
(11)	2 x ACC1B03000	Plug with gasket
(12)	2 x 1C000xx	Union end connection
(13)	ACC0001	Adjustment key

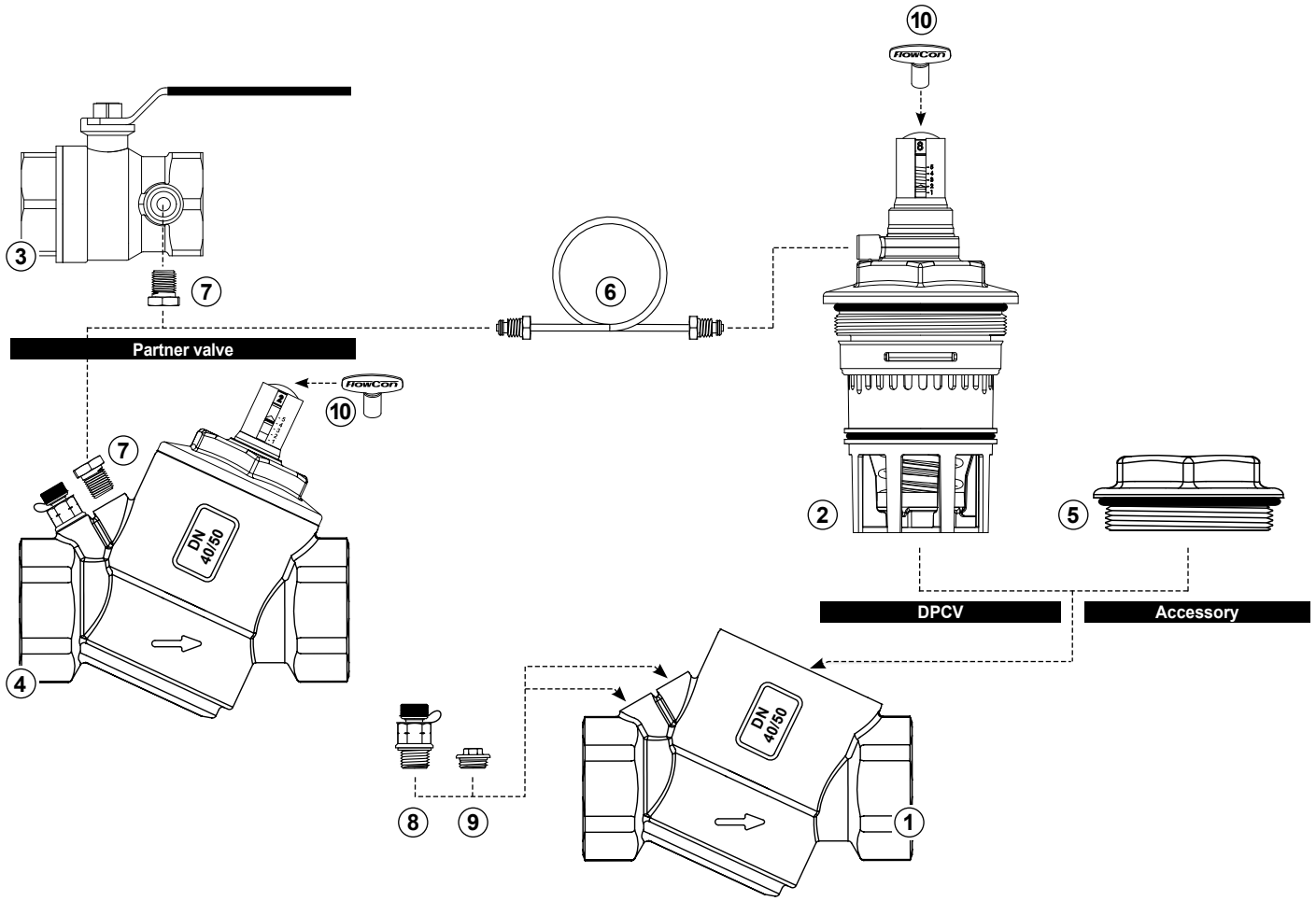

FlowCon EDP.3 DN40-50 (1 1/2”-2”) · Differential Pressure Control Valve

Valve housings		Insert		Partner Valves		Accessories	
1 AB40.I	Valve housing, DN40 (1 1/2”) Brass	2 EDP.3	50 mm EDP insert	3 PBV.x	Partner Ball	5 ACC0084	Flushing cap
1 AB50.I	Valve housing, DN50 (2”) Brass			4 AB.xx.B.I.xx.E	E-JUST in AB housing with p/t	6 ACC00110	Capillary tube
1 AB40.DI	Valve housing, DN40 (1 1/2”) Ductile iron					7 ACC00121	Union G 1/4” adaptor
1 AB50.DI	Valve housing, DN50 (2”) Ductile iron					8 2 x ACC00113	P/t plug with gasket
						9 2 x ACC1B03000	Plug with gasket
						10 ACC0001	Adjustment key